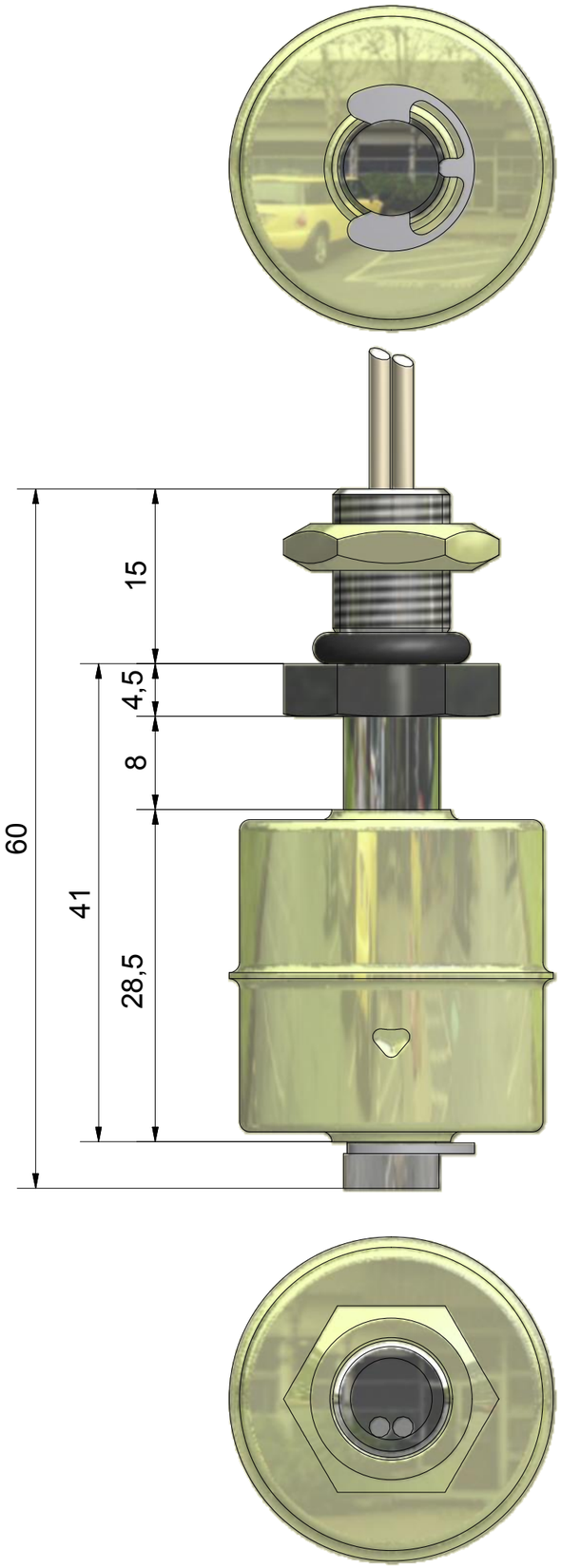

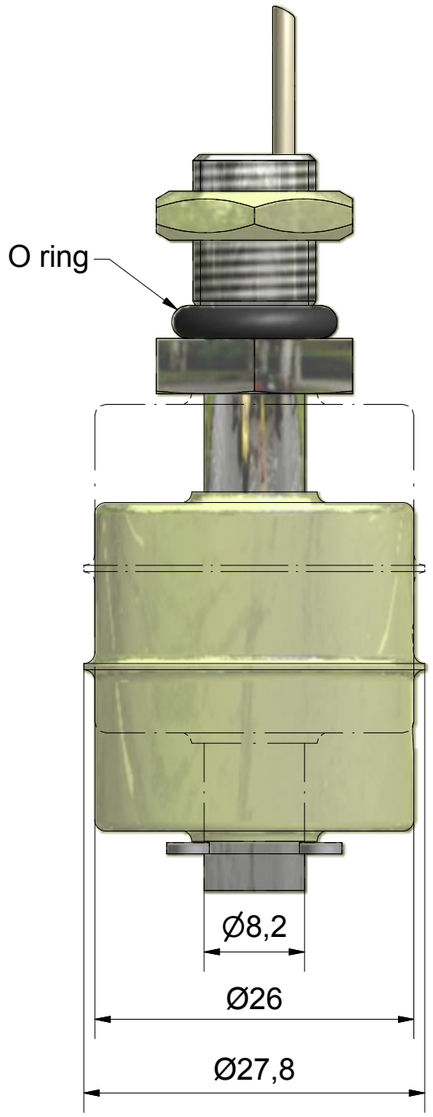

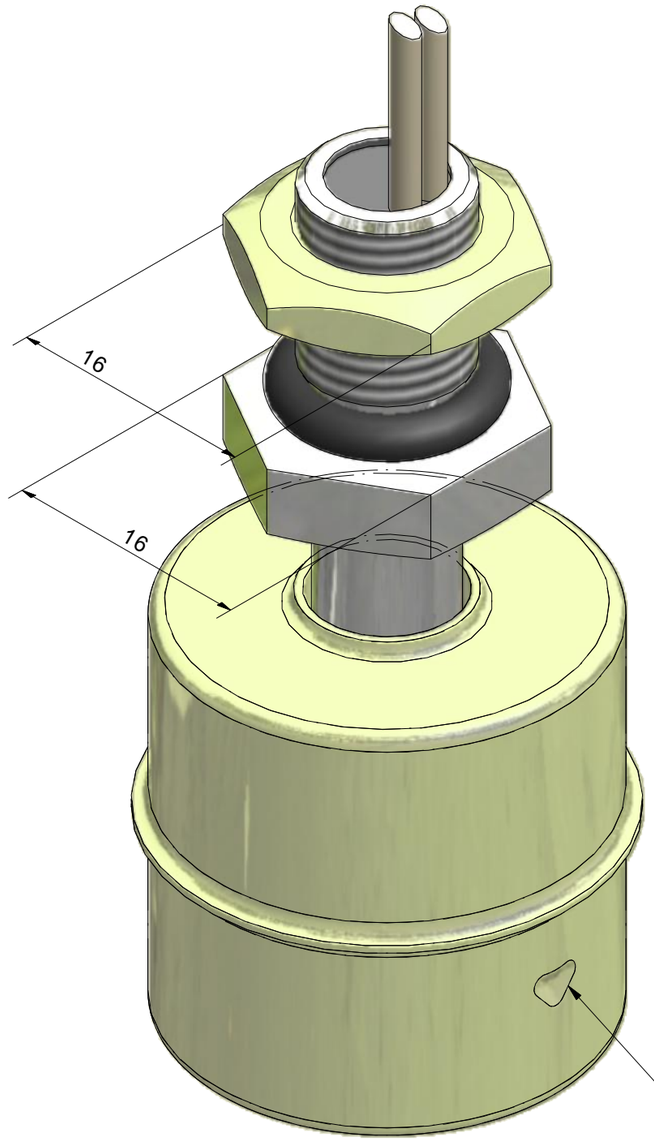

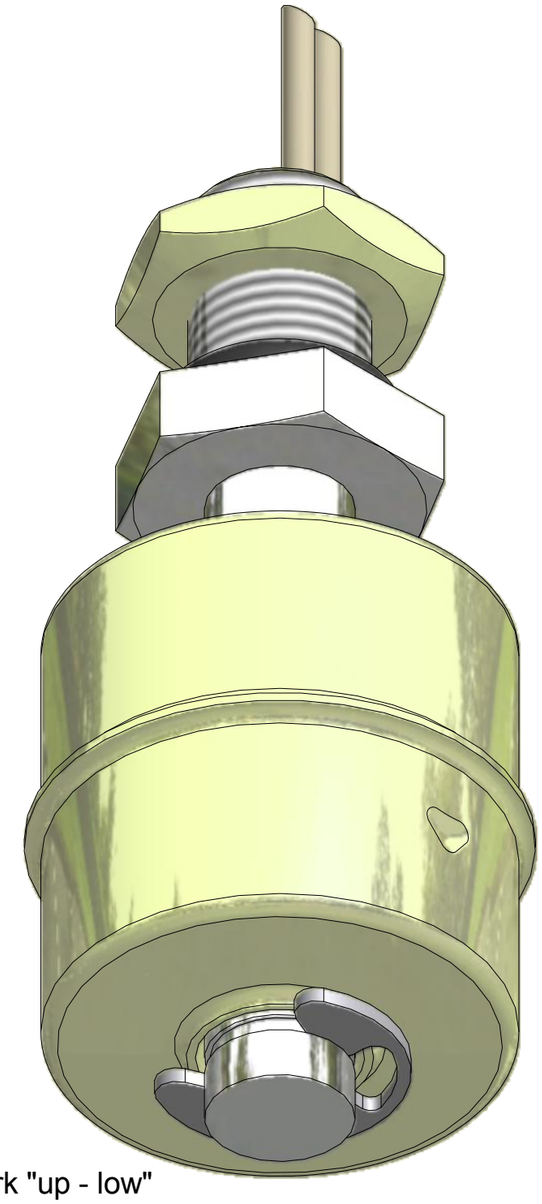

Any change made on this CAD document must be forwarded for update in the original computer file.

design forwarded:					F
					E
computer code: PTFA2115	V				D
					C
format sheet respectful of the scales: A3					B
		10/08/09	GTh3642	GTh	A
Ref:	Qty:	Folio : 1 / 1	date	created or modified	Valid	ind.

celduc® relais
www.celduc-relais.com
tel: +33 (0)4 77 53 90 27
fax +33 (0)4 77 53 85 51
gthollot@celduc.com
5, rue Ampère BP 30004
42290 SORBIERS FRANCE

general tolerances | Material

Obs:

Proximity Detectors
Vertical level sensor
overall dimensions

Number and index doc:
2D3D 519 A.idw

This document is the exclusive property of the Celduc relay company. Whatever the process, it will be neither reproduced nor communicated, nor used without written permission.

C:\Vault_local\Designs\Stock 3D pour clients\préparations\2D3D 519 A.idw